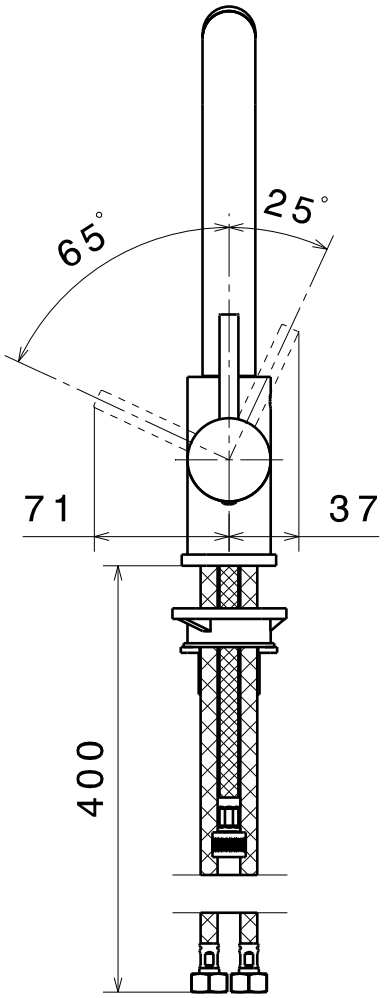
65°
25°
71
37
400

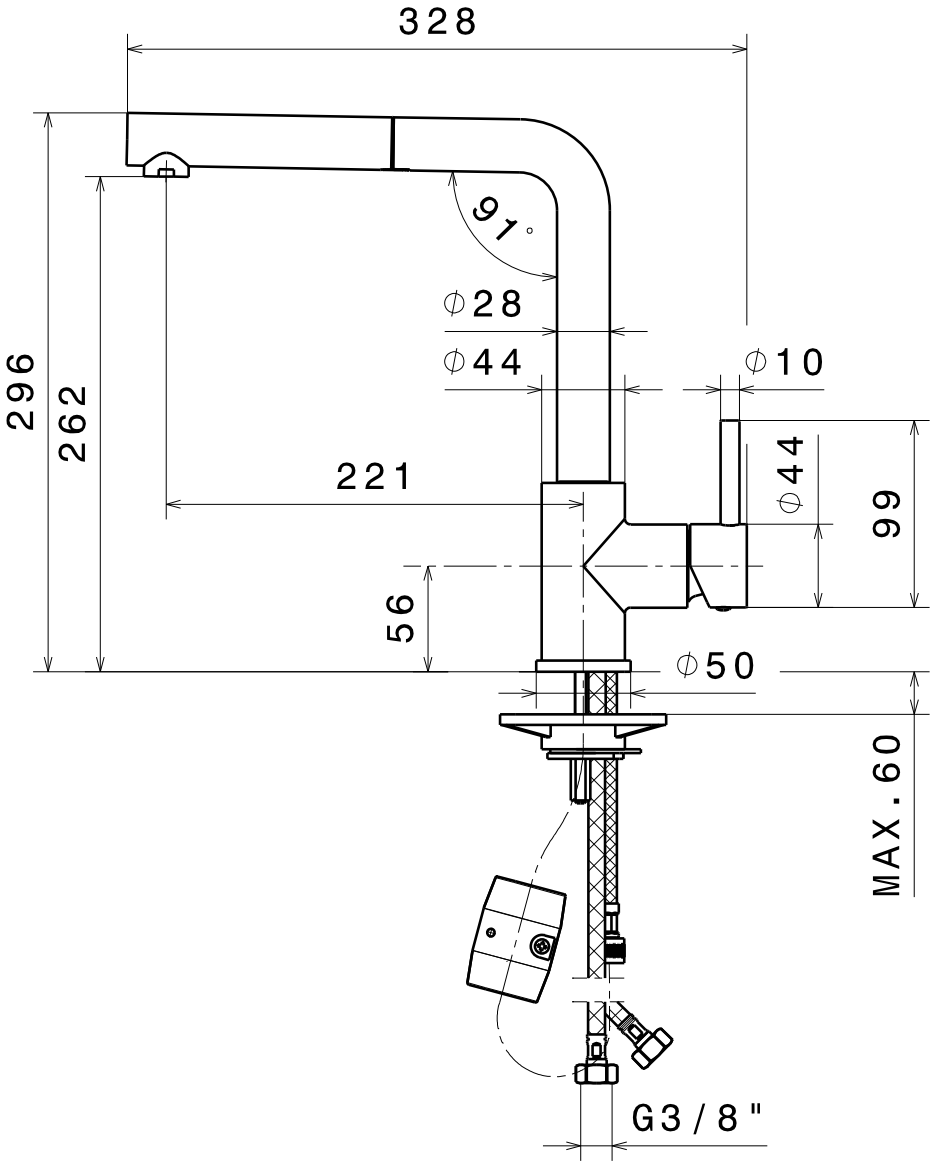
328
91°
ϕ28
ϕ44
ϕ10
296
262
221
ϕ44
99
56
ϕ50
MAX.60
G3/8"

REAL '63425'